236 E. Rodriguez Senior Avenus, Barangay Don Manuel, Quezon City, Metro Manila, Philippines 1113.
Tel: (+632) 740 7509 E-mail: info@kuysen.com

KUYSEN ENTERPRISES, INC.

SPECIFICATION SHEET - fittings

BRAND:	hansgrohe	**Product Photo:**
ORIGIN:	Germany	
SERIES:	**Talis E**	
PRODUCT DESCRIPTION:	3-hole 2-handle basin mixer • ComfortZone 150 • with basin pop-up waste 1¼" • Flow rate: 5 l./min. at 3 bar • Flow pressure; 1~5 bar (15~70 psi)	
MODEL No.	71733 000	
FINISH/COLOUR:	Chrome-plated	
DIMENSIONS:	126mm L 112mm spout projection	
OPTIONAL MATCHING PARTS:	2x angle valve ½"x⅜" basin waste trap	

Technical Informations: Suitable for continous flow water heater

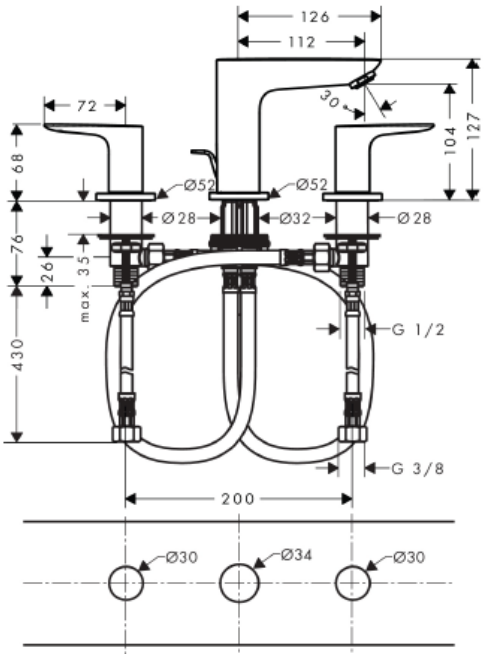

REMINDER:	Pipe flushing must be done before faucets are installed. Failure to do so voids the warranty.
	Do not use cleaners containing abrasive cleansers, ammonia, bleach, acids, waxes, alcohol, solvents or other products not recommended for chrome.
	All information is for reference only, installation shall always be based on the actual product delivered.